SYSTEM WIRING DIAGRAMS
A/C Circuit (1 of 2)
1997 Honda Accord

For DIAKOM-AUTO http://www.diakom.ru Taganrog support@diakom.ru (8634)315187

Copyright © 1998 Mitchell Repair Information Company, LLC
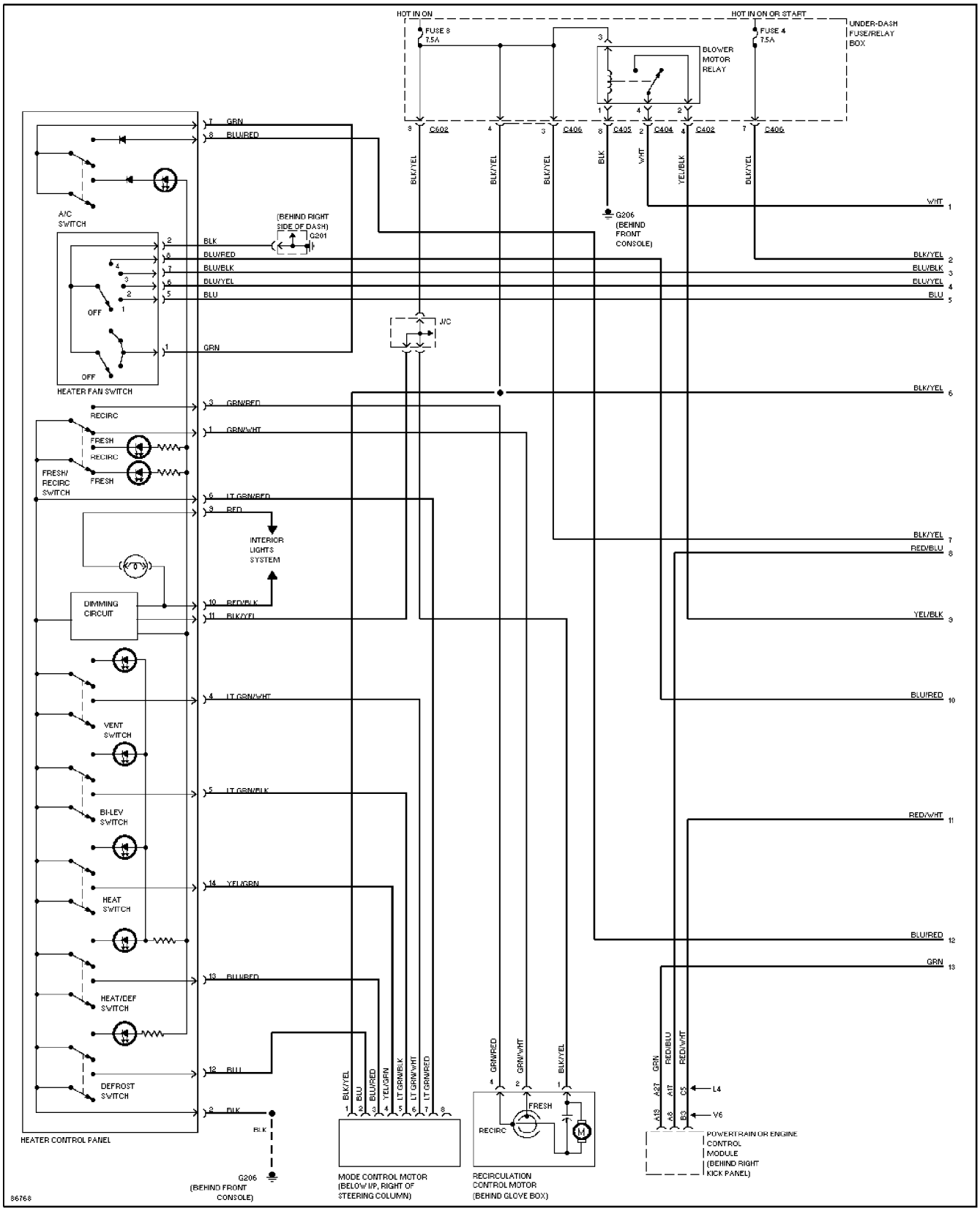
Saturday, December 23, 2000 05:03PM