SYSTEM WIRING DIAGRAMS
2.2L, Starting Circuit, A/T W/O Keyless Entry/Security Alarm System
1997 Honda Accord
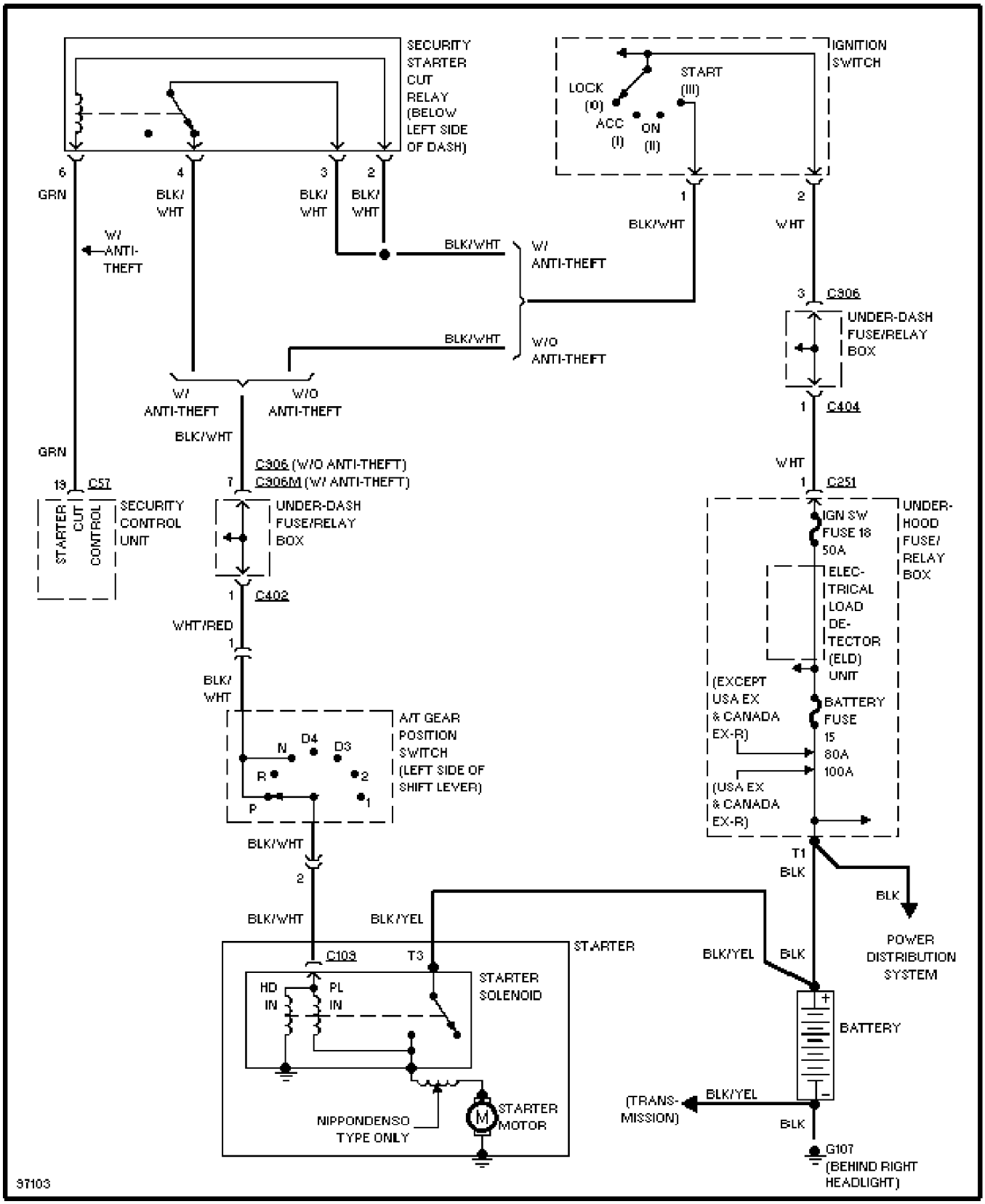
For DIAKOM-AUTO http://www.diakom.ru Taganrog support@diakom.ru (8634)315187
Copyright © 1998 Mitchell Repair Information Company, LLC
Saturday, December 23, 2000 05:13PM